FEMALE END VIEW

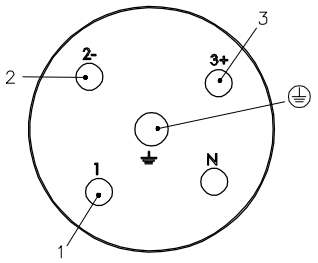

1 = BLACK
2 = RED
3 = WHITE
⏚ = GREEN/YELLOW

ENTRY HOLE PATTERN

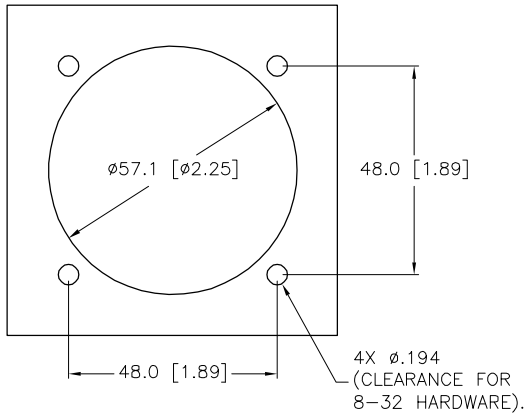

SPECIFICATIONS

CONTACT MATERIAL/PLATING	NICKEL/SILVER
HOUSING MATERIAL/COLOR	PBT/BLUE
RATED CURRENT [A]	30.0 A
RATED VOLTAGE, MAX. VOLTAGE [VAC]	480 VAC/600 VAC
CONDUCTOR INSULATION MATERIAL	PVC
NUMBERS OF CONDUCTORS [AWG]	4x10 AWG
TEMPERATURE RATING	−40°C to +60°C (−40°F to +140°F)
PROTECTION CLASS	IEC IP66, IP67

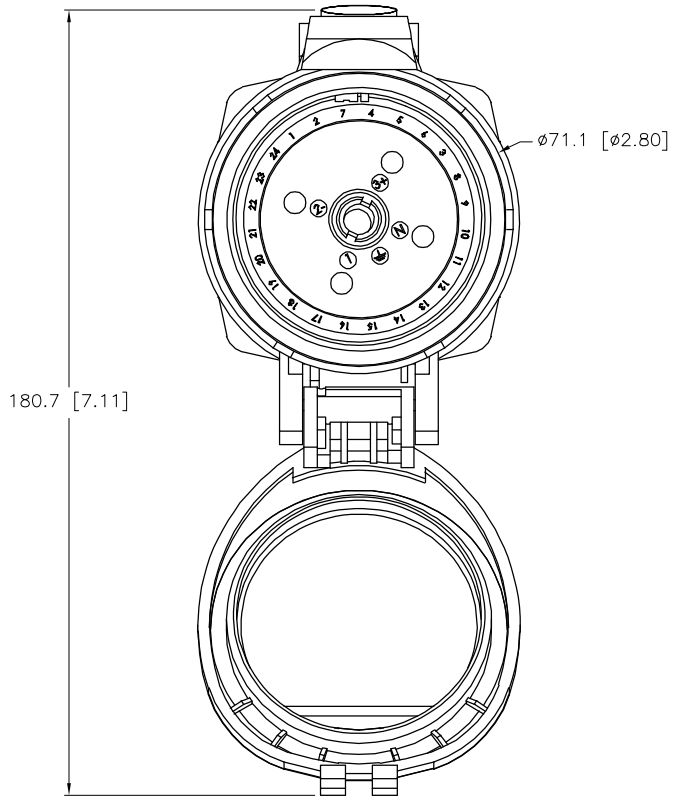

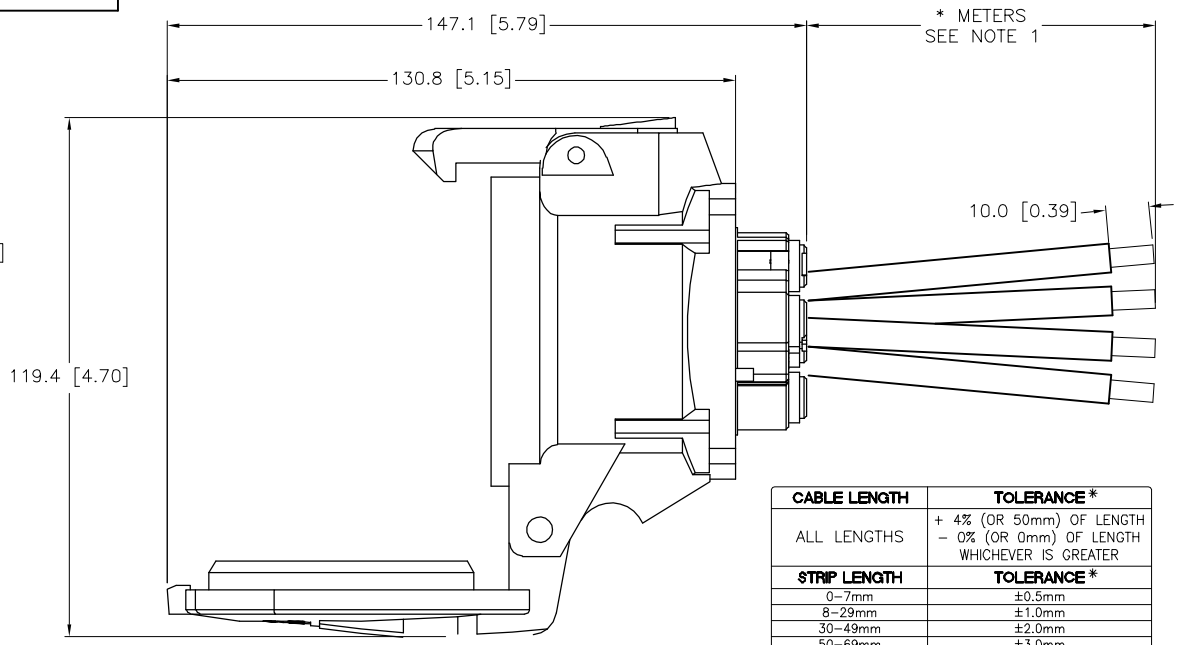

CABLE LENGTH	TOLERANCE *
ALL LENGTHS	+ 4% (OR 50mm) OF LENGTH − 0% (OR 0mm) OF LENGTH WHICHEVER IS GREATER
STRIP LENGTH	**TOLERANCE ***
0–7mm	±0.5mm
8–29mm	±1.0mm
30–49mm	±2.0mm
50–69mm	±3.0mm
70–100mm	±4.0mm
OVER 100mm	±5.0mm
* UNLESS OTHERWISE SPECIFIED	

SOURCE DRAWING - FOR REFERENCE ONLY

NOTES:

1. "*" INDICATES WIRE LENGTH IN METERS. CONTACT TURCK TO ORDER SPECIFIC LENGTHS.

REV	DESCRIPTION	BY	DATE	ECO NO.
B	UPDATE CONDUCTOR COLOR	NF	09/01/17	61725

RELATED DOCUMENTS
1.
2.
3.
4.

3RD ANGLE PROJECTION

THIS DRAWING IS CONFIDENTIAL AND THE PROPERTY OF TURCK INC. USE OF THIS DOCUMENT WITHOUT WRITTEN PERMISSION IS PROHIBITED.

TURCK

3000 CAMPUS DRIVE
MINNEAPOLIS, MN 55441
1-800-544-7769
(763) 553-7300
(763) 553-0708 fax
www.turck.us

MATERIAL: SEE SPECIFICATIONS

FINISH: SEE SPECIFICATIONS

ALL DIMENSIONS DISPLAYED ON THIS DRAWING ARE FOR REFERENCE ONLY

CONTACT TURCK FOR MORE INFORMATION

DRFT: NF | DATE: 06/24/15
APVD: L.H. | SCALE: 1=1.8

UNIT OF MEASUREMENT
MILLIMETER [INCH]

DO NOT SCALE THIS DRAWING

DESCRIPTION: LPKF−3A−40−*

IDENTIFICATION NO.

REV: B

FILE: 777035320

SHEET 1 OF 1